GEOTOOL

DPG 1400

PILE DRIVER
DPG 1400

Fully hydraulic
pile driver
on rubber track

THE DPG 1400
A COMPACT YET POWERFUL PILE DRIVER FROM OUR DPG SERIES

Precision and speed for guardrail installation along roads and highways: The DPG 1400 drives posts quickly and reliably while offering intuitive operation. Robustly built for demanding continuous use, efficient in operation and highly versatile – especially for projects where compact machine dimensions are essential.

The DPG 1400 was developed in close cooperation with leading German companies in the guardrail industry. Built on a robust undercarriage with a 360° slewing ring, the upper structure can be hydraulically rotated continuously in either direction.

The DPG 1400 is powered by a 3-cylinder Hatz diesel engine. Its modern and efficient hydraulic system combines high reliability with low maintenance requirements. The system is protected by a robust enclosure that reduces exposure to weather conditions. All components are quickly and easily accessible through maintenance panels.

The Epiroc IM 155 percussion hammer reliably drives posts and piles of various types and shapes into the ground. The hammer is connected to the mast by a hydraulic chain feed system providing both pull and downforce. The complete mast assembly can be moved horizontally. An automatic stop function for the mast travel is also integrated.

Optional radio remote controls are available either for the undercarriage only or for full hydraulic operation of the entire machine. All-round work lighting as well as storage boxes for tools and accessories are also available as options.

DPG 1400
ON RUBBER TRACKS

Precision and speed for guardrail installation along roads and highways. Robustly built for demanding continuous use, efficient in operation and highly versatile – especially for projects where compact machine dimensions are essential.

KEY FEATURES

- Compact, fully enclosed machine on self-propelled rubber tracks
- Powerful undercarriage with excellent off-road capability
- Fully hydraulic, continuous 360° rotation
- Storage compartments and boxes for tools and accessories

TECHNICAL DATA
OVERVIEW

Dimensions	Transport height	2,270 mm / 7.45 ft
	Transport width	1,400 mm / 4.59 ft
	Transport length	3,735 mm / 12.25 ft
	Weight	3,100 kg / 6,834 lbs
Motor	Engine	Hatz 3F45 3-Cylinder Diesel
	Power	18,4 kW at 2.400 rpm
	Torque	76 Nm / 56 ft-lbs
	Exhaust gas certificate	Stage V / Tier 4 final
Motor option	Engine	Hatz 3H50TICD OPU 3-Cylinder Diesel
	Power	43.7 kW at 2,800 rpm
	Torque	148 Nm / 109 ft-lbs
	Exhaust gas aftertreatment	AGR / DOC / DPF
	Exhaust gas certificate	Stage V / Tier 4 final
Percussion hammer	Ram unit	Epiroc IM 155
	Blow energy	410 Joule
	Frequency	up to 900 blows/min.
Percussion hammer option	Ram unit	Epiroc IM 305
	Blow energy	850 Joule
	Frequency	up to 1,150 blows/min.
Mast lengths	Feed stroke (short)	2,500 mm / 8.20 ft
	Pile length max.	3,185 mm / 10.45 ft
	Mast height min.	4,045 mm / 13.27 ft

GEOTOOL
DPG 1400

TECHNICAL DATA
OVERVIEW

DPG 1600

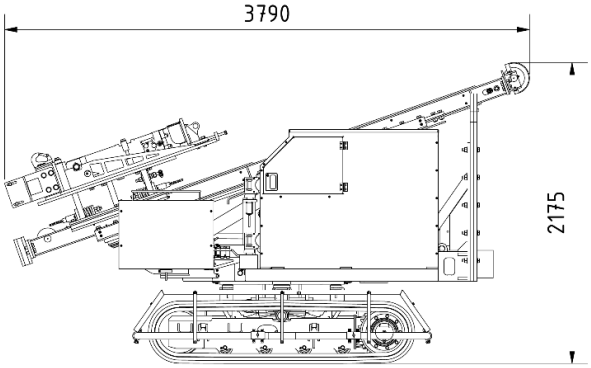

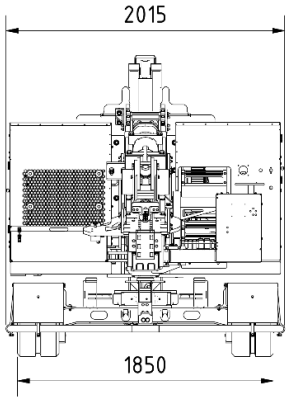

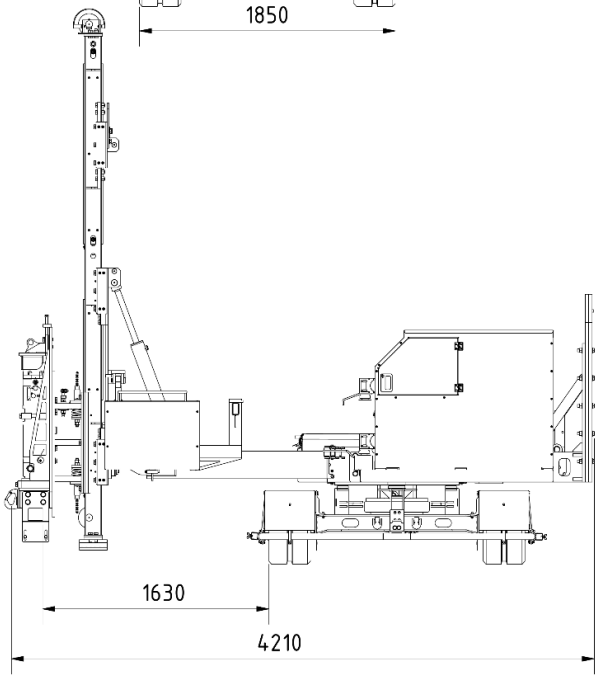

DPG 1400

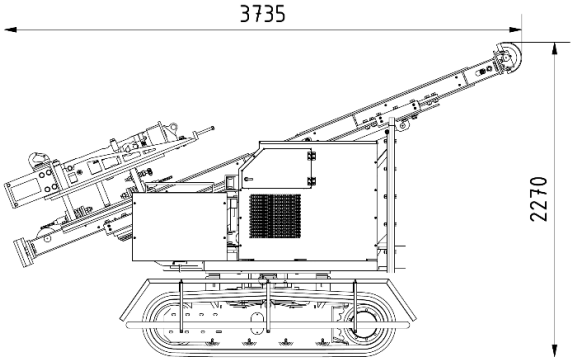

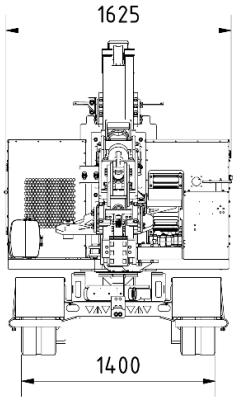

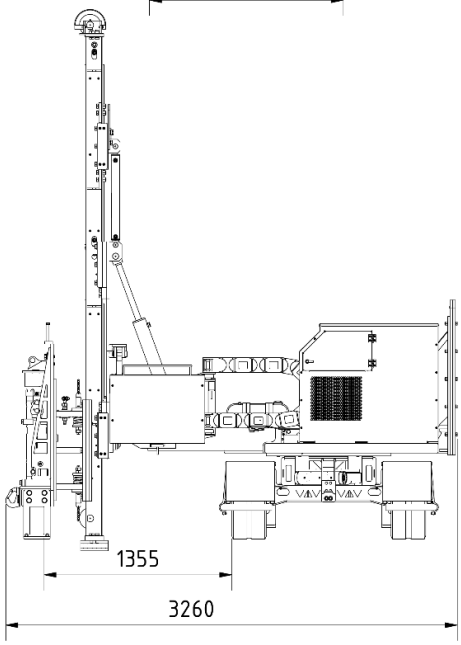

CONTACT

Do you have questions about our equipment or are you looking for a solution for your project? GEOTOOL stands for personal consultation, technical expertise and partnership support.

Feel free to call us – together
we'll find the right solution.
We look forward to your inquiry.

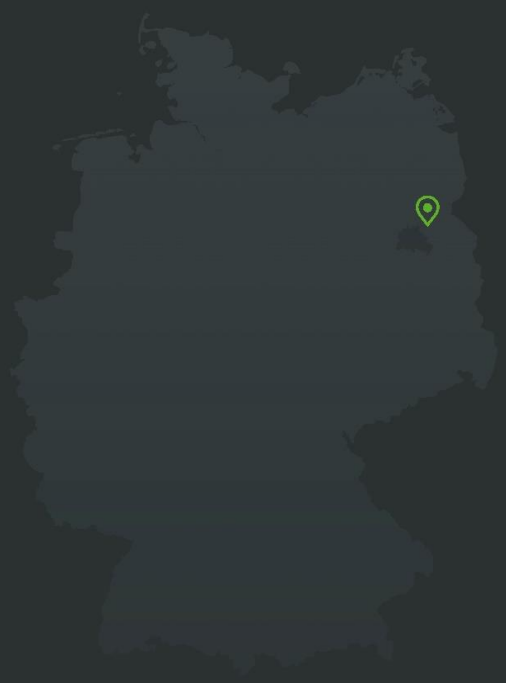

OUR LOCATION
IN GERMANY

+49 33398 9142-0
info@geotool.de
www.geotool.de